VICOR CONFIDENTIAL

THIS DOCUMENT AND THE DATA DISCLOSED HEREIN OR HEREWITH IS NOT TO BE REPRODUCED, USED OR DISCLOSED IN WHOLE OR IN PART TO ANYONE WITHOUT THE PERMISSION OF VICOR CORP.

| REVISIONS | | | | |
|---|---|---|---|---|
| REV | DESCRIPTION | | DATE | APPROVED |
| 1 | RELEASED PER E064424 | REJH | 08/16/06 | MB |
| 2 | REVISED PER E101309 | KUK | 10/22/10 | AR |
| 3 | REVISED PER E190025 | CL | 01/17/19 | DH |
| 4 | REVISED PER E190103 | CL | 02/20/19 | DH |

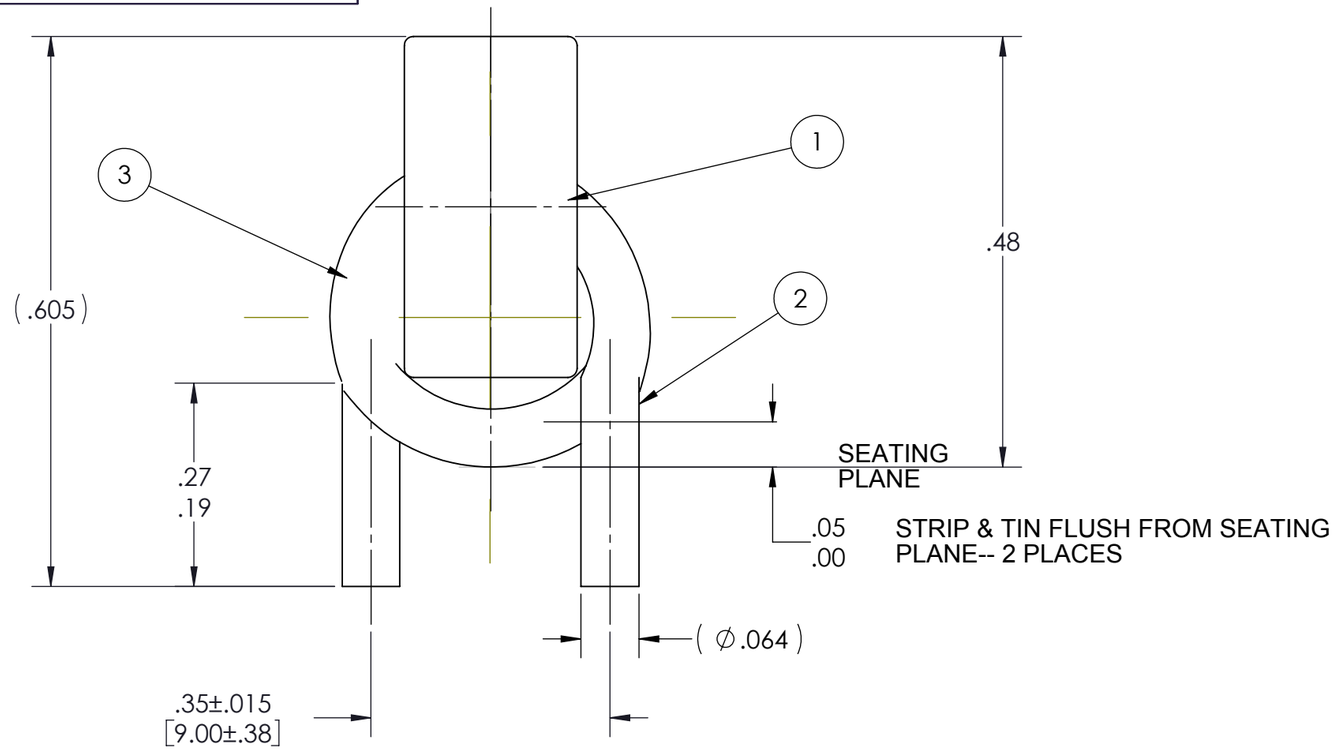


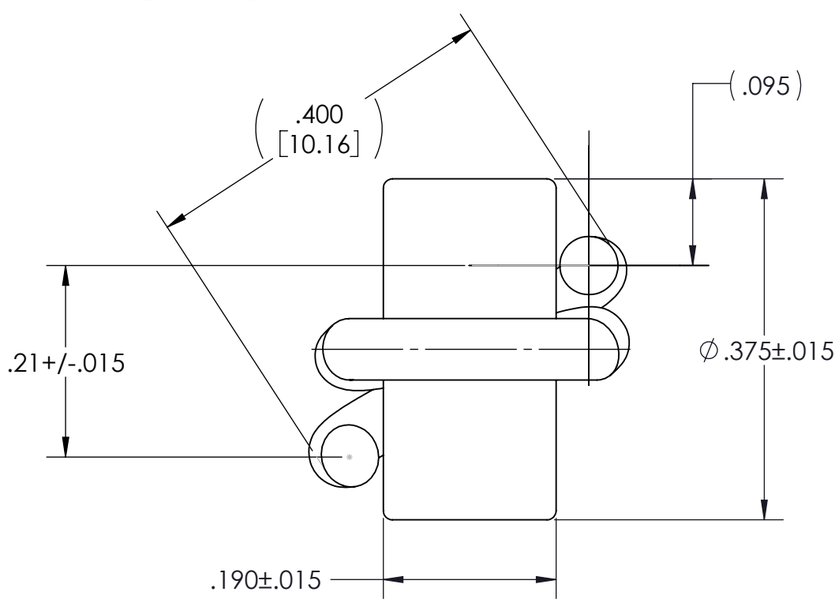


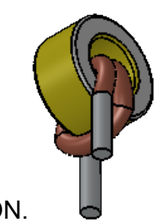

NOTES:
1. RoHS COMPLIANT, LEAD FREE PER CST-0001 LATEST REVISION.

| ITEM | QTY. | U/M | PART NO. | DESCRIPTION | MAT'L. SPEC. |
|---|---|---|---|---|---|
| 3 | A/R | - | 81-00004 | ADHESIVE, SICOMET 7000 AND / OR LOCTITE | 38240 |
| 2 | 2.2 | IN. | 56-00002 | WIRE, COPPER, SOLID. #14AWG, MAGNET | |
| 1 | 1 | EA | 36-00003 | CORE, .2uH, OUTPUT | MICROMETALS-T38-26 |

| DRAWN | DATE |
|---|---|
| P.E.IENI | 08/15/05 |

MATERIAL

FINISH

UNLESS OTHERWISE SPECIFIED
DIMENSIONS ARE INCH [MM]
TOLERANCES ARE:
DECIMALS ANGLES
X.XX [X.X] = ±0.01 [0.25] ±1°
X.XXX [X.XX] = ±0.005 [0.127]

THIRD ANGLE PROJECTION

DO NOT SCALE DRAWING

VICOR

SWD

**INDUCTOR ASSY**
**OUTPUT, .2uH**

| SIZE | CAGE CODE | DWG NO | REV |
|---|---|---|---|
| B | 67131 | 30268 | 4 |

SCALE 6 : 1

SHEET 1 OF 1

Downloaded from Arrow.com.